UltraMatic™ Model UMA

Actuated Automatic Flow Control Valve with V-Port Flow Characterizing Disk

(½" LO, ¾" LO, 1" XLO)

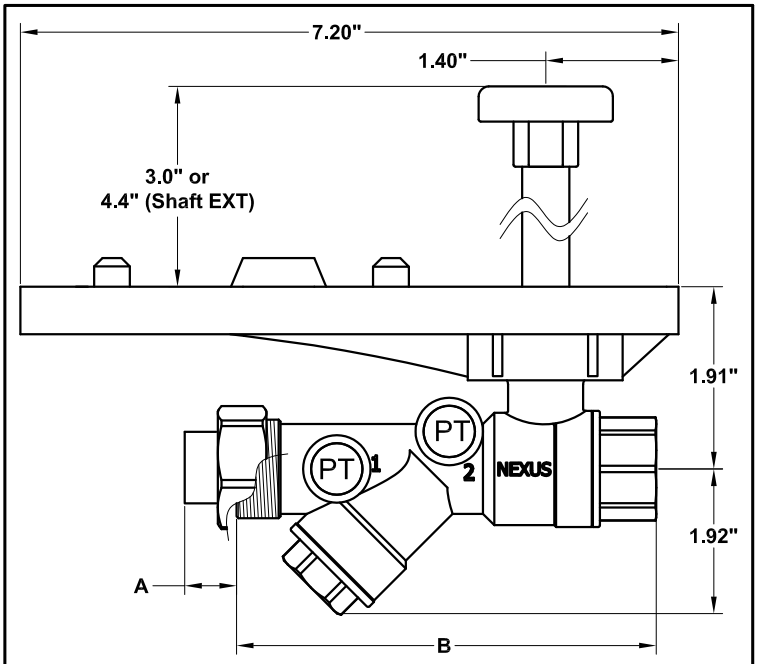

Valve Body available in FNPT, Sweat, NexPress or NexLok

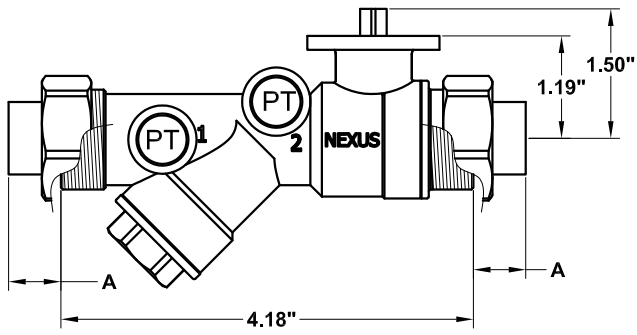

Double Union Ends used for all Body sizes except ½" FNPT

DIMENSIONS [inches]

SIZE [inches]	XLO	LO	A	B F (FNPT)	B S (SWT)	B P (NexPress)	B L (NexLok)	WT [lbs] (Tail Pieces, Nuts & Union Adapters not included) F	S	P	L
½		√		4.34	4.49	4.88	4.61	1.15	1.12	1.18	1.04
¾		√		4.34	4.58	4.93	4.80	1.18	1.13	1.19	0.98
1	√			4.70	4.83	6.62	5.32	1.34	1.32	2.13	2.00

TAIL PIECE OPTION	Nexus P/N	Lengths [inches]	Use with Valve Body size
MNPT (Male NPT Thread)	TP075-050M	1.00	½ LO, ¾ LO, 1 XLO
	TP125-075M	1.16	½ LO, ¾ LO, 1 XLO
	TP125-100M	1.29	*used with Union Adapter: UA-075-125*
FNPT (Female NPT Thread)	TP125-050F	1.00	½ LO, ¾ LO, 1 XLO
	TP125-075F	1.00	*used with Union Adapter:*
	TP125-100F	1.20	*UA-075-125*
SWT (Female Sweat)	TP075-038S	0.58	½ LO, ¾ LO, 1 XLO
	TP075-050S	0.59	
	TP125-075S	0.85	½ LO, ¾ LO, 1 XLO
	TP125-100S	1.00	*used with Union Adapter: UA-075-125*
NexPress	TP125-050P	1.46	½ LO, ¾ LO, 1 XLO
	TP125-075P	1.54	*used with Union Adapter:*
	TP125-100P	3.85	*UA-075-125*
NexLok	TP125-050L	1.03	½ LO, ¾ LO
	TP125-075L	1.29	*used with Union Adapter: UA-075-125*

FLOW RATE SELECTIONS

SIZE [inches]	PSID (range)	GPM (± 5.0%)
½ LO, ¾ LO, 1 XLO	2 - 45	0.33, 0.5, 0.75, 1.0, 1.25, 1.5, 1.75, 2.0, 2.25, 2.5, 2.75, 3.0, 3.5, 4.0, 4.5, 5.0, 5.5, 6.0
	4 - 55	7.0, 8.0

Equal Percentage Characteristic "Cv" Selection

SIZE [inches]	Cv
½ LO, ¾ LO, 1 XLO	0.5, 0.8, 1.7, 2.2, 3.5, 4.3, 6.1, 9.0* *(* no flow disk)*

Please consult the "Ordering Guide" section in Nexus Valve Catalog for complete part number and ordering information.

MATERIALS & DESIGN DATA

BODY	.....HOT FORGED BRASS ASTM B283, 600 WOG, 325°F, INTERCHANGEABLE UNION ENDS
END PIECES	.....HOT FORGED BRASS ASTM B283 NexPress: 200 PSIG, 250°F / NexLok: 250 PSIG, 200°F
KNOB	.....STYRENE, BLACK
BALL	.....HARD CHROME PLATED BRASS / STAINLESS STEEL (optional)
BALL SEALS	.....TEFLON
SHAFT	.....STAINLESS STEEL, BLOWOUT-PROOF DESIGN
SHAFT SEALS	.....DUAL FKM O-RINGS
SHAFT WASHER	.....TEFLON
UNION SEAL	.....FKM O-RING
CAP SEAL	.....FKM O-RING
FLOW CARTRIDGE	.....STAINLESS STEEL MOVING PARTS IN BRASS HOUSING, REMOVABLE, PAT # 8517051
V-PORT FLOW DISK	.....AMODEL AS-1145 HS PPA
ACCURACY	.....±5%

ACCESSORIES

Order Code	Part No.	Description
☐	H	.... HT. HANGING TAG with Model No., Location, Flow Rate *(Maximum 7 Characters)*
☐	X	.... PTE. PRES / TEMP TEST PLUG EXTENSION 1 9/16" O.A.L. .... ACTUATOR, SHAFT EXTENSION & MOUNTING ANCHORS

PROJECT _____

CONTRACTOR _____

PO/JOB NO. _____

ENGINEER _____

REPRESENTATIVE _____

DATE _____

Copyright © 2009 Nexus Valve, Inc. All Rights Reserved

(Rev: 02/20/17)